THE INFORMATION CONTAINED IN THIS DRAWING IS THE SOLE PROPERTY OF PLASTICASE ANY REPRODUCTION IN PART OR WHOLE WITHOUT THE WRITTEN PERMISSION OF PLASTICASE IS PROHIBITED.

REVISIONS			
REV.	DESCRIPTION	DATE	APPROVED

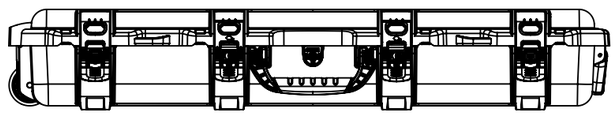

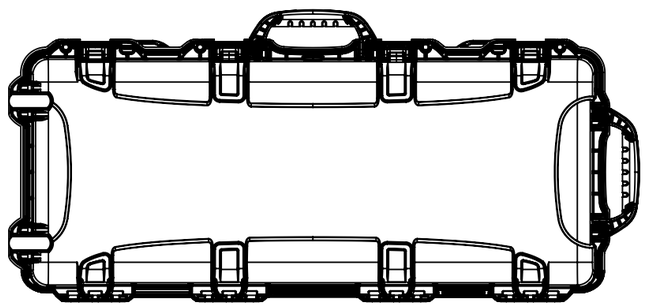

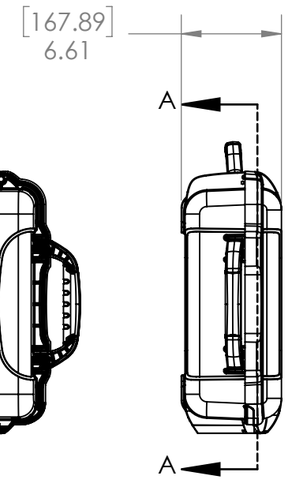

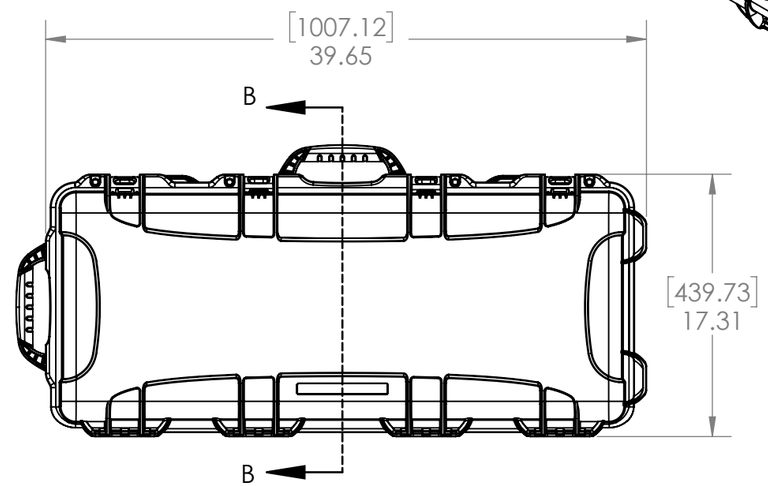

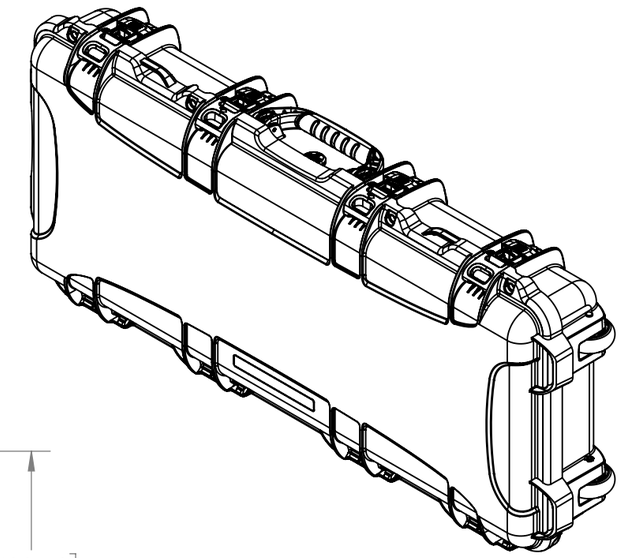

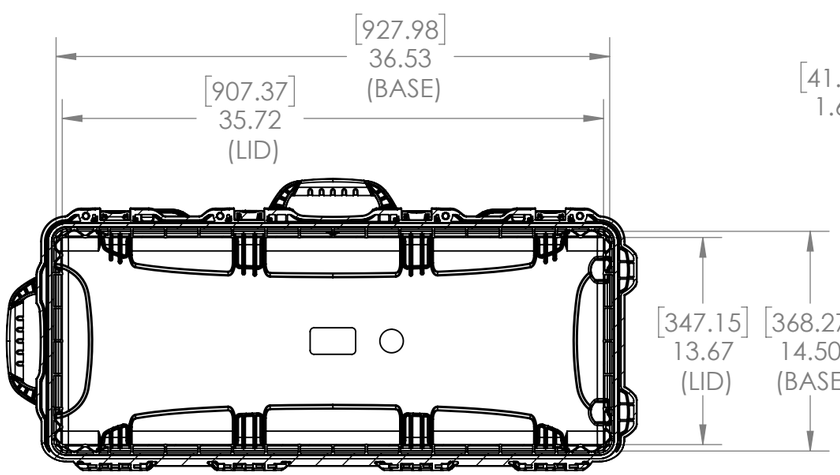

COUPE A-A
SCALE 1 : 10

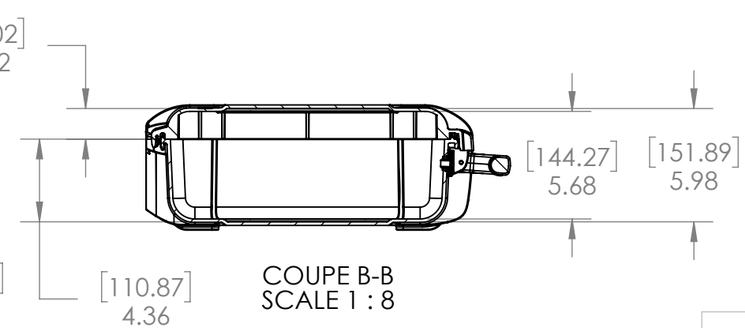

COUPE B-B
SCALE 1 : 8

NANUK 985 Specifications	
Case Weight Empty	15.8 lbs / 7.2 kg
Interior Length	36.5" / 928mm
Interior Width	14.5" / 368mm
Interior Height	6" / 152mm
Interior Lid Depth	1.6" / 41mm
Interior Base Depth	4.4" / 111mm
Exterior Length	39.7" /1007mm
Exterior Width	17.3" / 440mm
Exterior Height	6.6" / 168mm
Master Pack Qty.	1
Master Pack Wt.	N/A
Max Buoyancy	100 lbs / 45 kg

PARTS LIST

UNLESS OTHERWISE SPECIFIED DIMENSIONS ARE IN INCHES

MATERIAL

FINISH --

DO NOT SCALE DRAWING

CAD GENERATED DRAWING, DO NOT MANUALLY UPDATE

APPROVALS		DATE
DRAWN	MK	4/12/2019
CHECKED		
RESP ENG		
MFG ENG		
QUAL ENG		

PLASTICASE

NANUK 985

SIZE B | DWG. NO. | REV.

SCALE 1:12 | CAD FILE: 985_BOM_ASSEMBLY | SHEET 1 OF 1